钱江链条
QIANJIANG CHAIN

不锈钢双节距加长销轴输送链
Stainless steel double pitch conveyor chains with extended pins

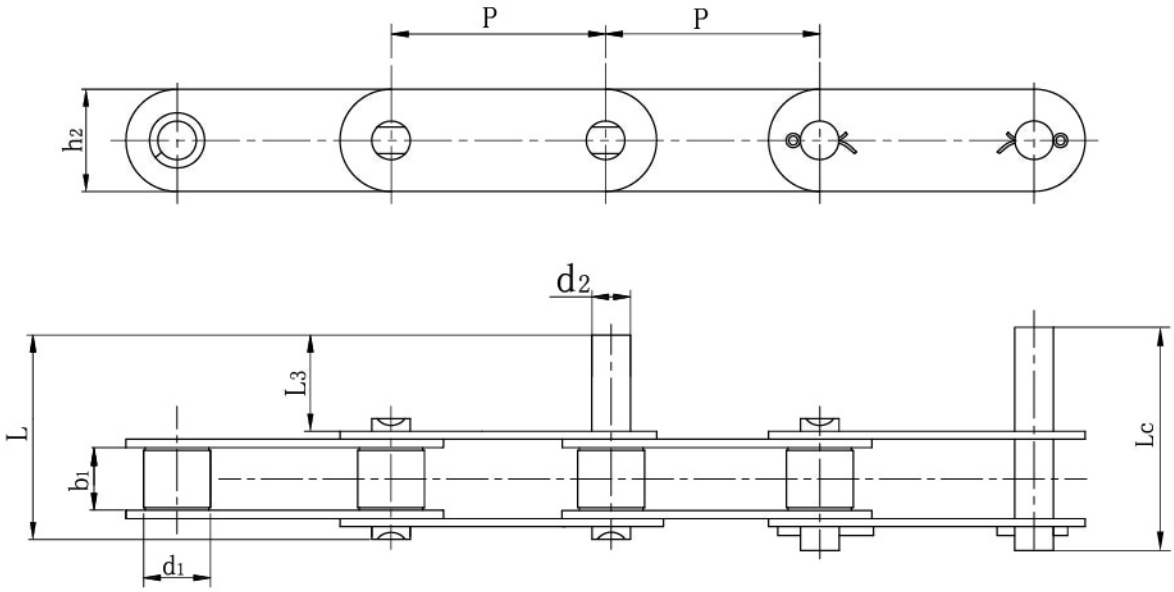

DIN/ISO 链号	P	b1	d2	L3	L	Lc
DIN/ISO Chain No.	mm	mm	mm	mm	mm	mm
C2040SS C2042SS	25.40	7.85	3.96	9.5	25.1	26.2
C2050SS C2052SS	31.75	9.40	5.08	11.9	31.3	33.1
C2060SS C2062SS	38.10	12.57	5.94	14.3	38.6	40.6
C2060HSS C2062HSS	38.10	12.57	5.94	14.3	42.0	43.8
C2080SS C2082SS	50.80	15.75	7.92	19.1	50.3	53.3
C2080HSS C2082HSS	50.80	15.75	7.92	19.1	53.5	55.0
C2100SS C2102SS	63.50	18.90	9.53	23.8	61.8	66.1
C2100HSS C2102HSS	63.50	18.90	9.53	23.8	65.0	68.3
C2120HSS C2122HSS	76.20	25.22	11.10	28.6	19.6	83.6
C2160HSS C2162HSS	101.60	31.75	14.27	38.1	103.0	107.8